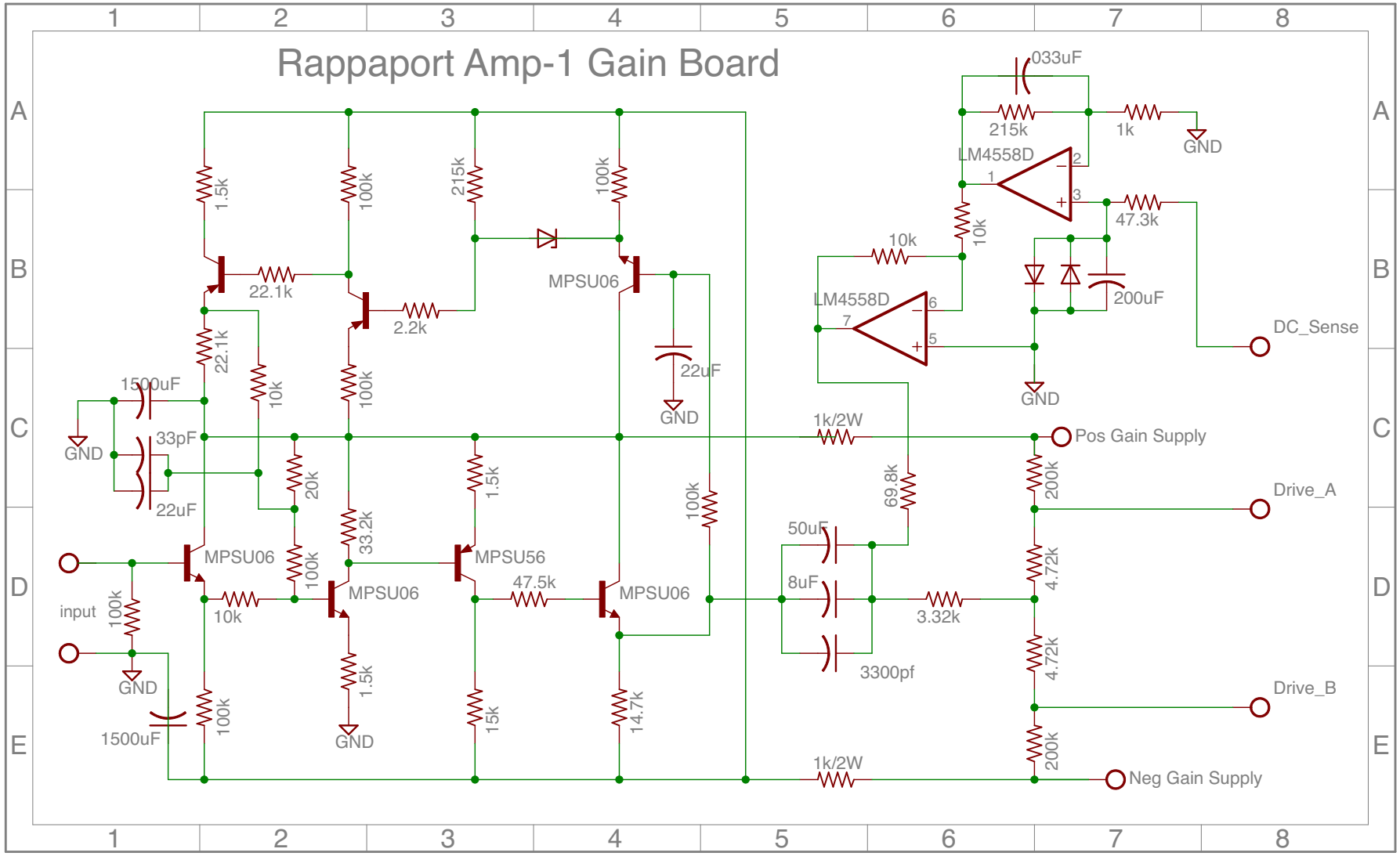
Rappaport Amp-1 Gain Board
1.5k
100k
215k
100k
22.1k
2.2k
MPSU06
22uF
GND
22.1k
10k
100k
1500uF
33pF
GND
22uF
20k
33.2k
1.5k
100k
MPSU06
MPSU06
MPSU56
MPSU06
input
100k
10k
47.5k
GND
1.5k
1500uF
100k
GND
15k
14.7k
.033uF
215k
1k
GND
LM4558D
47.3k
10k
10k
LM4558D
200uF
DC_Sense
GND
1k/2W
Pos Gain Supply
69.8k
200k
Drive_A
50uF
8uF
3.32k
4.72k
3300pf
4.72k
Drive_B
200k
1k/2W
Neg Gain Supply